L WOLF JON D & BARBARA
9671 WINCHESTER ST

MASCOUTAH IL 62258
Site Address: 009671 WINCHESTER ST

BLDG #	1	
Style (Tb-02)	1.0	One Story
Quality (Yr-95)	C+10	C+10 Averag
Building Use	0040	Single Fami
Exterior Wall 1	F75	75% Frame
Exterior Wall 2	M25	25% Masonry
Foundation Adj	F	Full Bsmt
Basement		
Combination		
Attic Area		
Heat/AC Adj	AC	Central Air
Comb Ht/AC Adj		
Fireplace	03	C-Fireplace
Extra Fireplace	00	N/A
Res Fixtures	0008	08 Fixtures
Garage	MF	Masonry/Fra
Mobile Home	0000	N/A
Design Adj	04	Good
Actual Year Blt	2013	
Effect Year Blt	2013	
Normal Depr Tbl	A	Res CDU - A
Functional Obs.	000000	
Economic Obs.	000000	
Observed Cond.	000000	
Obs. Cond. Code		
Cost Factor	000	N/A

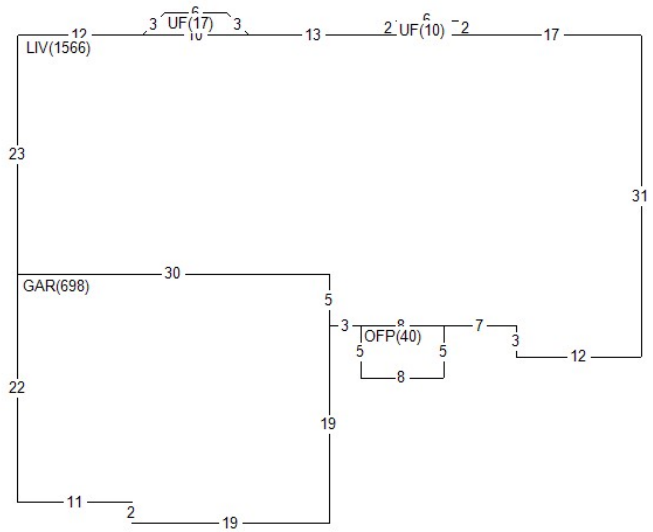

BOOK	PAGE	DATE	QS	SALE PRICE

PERMIT NO	TYPE	DATE	AMOUNT
MAS 12-81	RS	1212	150,000

Appraiser 033 JL
Appr Date 08/10/21
Use Code 0040 Imp. Res.
NBHD 30010.00 Mascoutah
L100 M115 B125

AREA	FLAT	EFF%	E/AREA	ACT%	A/AREA	EA/AA	HEATED
LIV	1566	1.00	1566	1.00	1566	1566	1566
GAR	698	1.00	698	1.00	698	698	
UF	27	1.00	27	1.00	27	27	27
OFP	40	1.00	40	1.00	40	40	

History Values

Tax Year	Total Appraised Value
24	318,193
23	290,799
22	264,651

MISC	BLDG	CODE	DESC	LENGTH	WIDTH	UNITS	EYB	DT
1	1	CP	Concrete Paving	.00	.00	1102.00	2013	A
2	1	CP	Concrete Paving	14.00	14.00	196.00	2013	A
3	1	OFP	Open Frame Porch	8.00	5.00	40.00	2013	A
4	1	ALF	Aluminum Fence	.00	.00	190.00	2013	A
5	1	CP	Concrete Paving	26.00	3.00	78.00	2013	A
6	1	VCL	Vaulted Ceiling	.00	.00	300.00	2013	A

LAND	LUSE	DESC	UNITS	TP
1	0040	RES- IMP RESIDEN	1.00	L

---------- ADJUSTMENT CODES ----------